FIG. NO. 1 C-1 4WD vehicles (RB20DET/RB26DETT equipped models)

Visit R32Skylines.com for more information and guides

Cont'd Fig. No. 1 C-1 4WD Vehicles (RB20DET/RB26DETT equipped models)

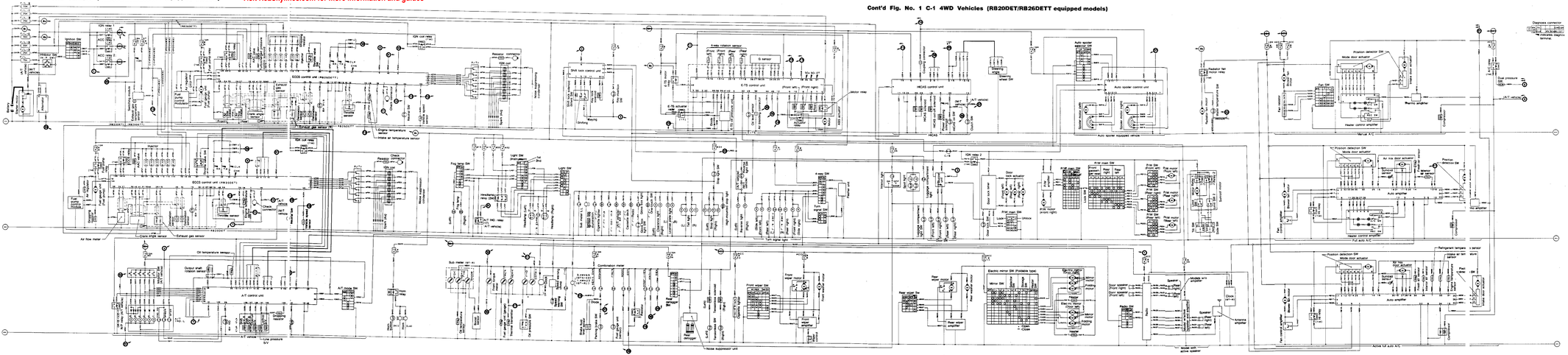

Fig. No. 6 W-4 DOOR HARNESS

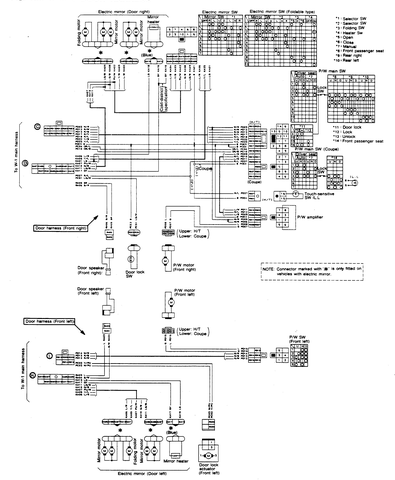

Fig. No. 2 W-1 4WD VEHICLE (RB20DET/RB26DETT EQUIPPED MODELS)

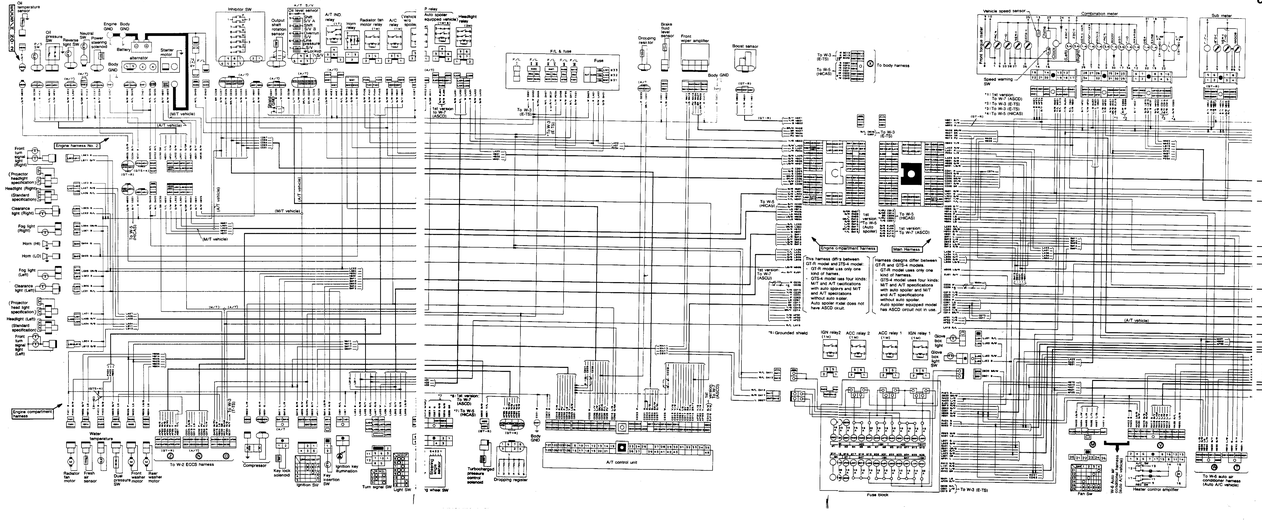

Cont'd Fig. No. 2 W-1 4WD Vehicles (RB20DET/RB26DETT)

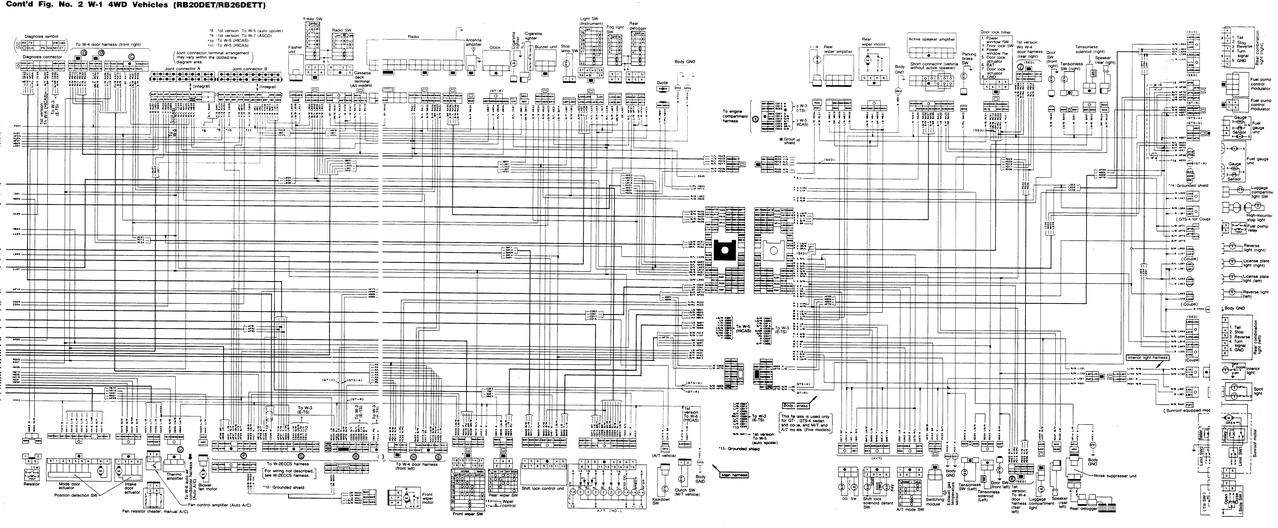

(03) RB26DETT

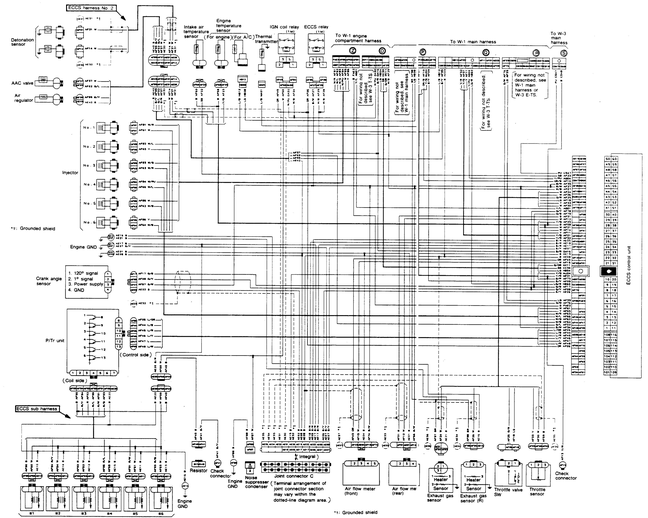

Fig. 7 W-5 HICAS SYSTEM

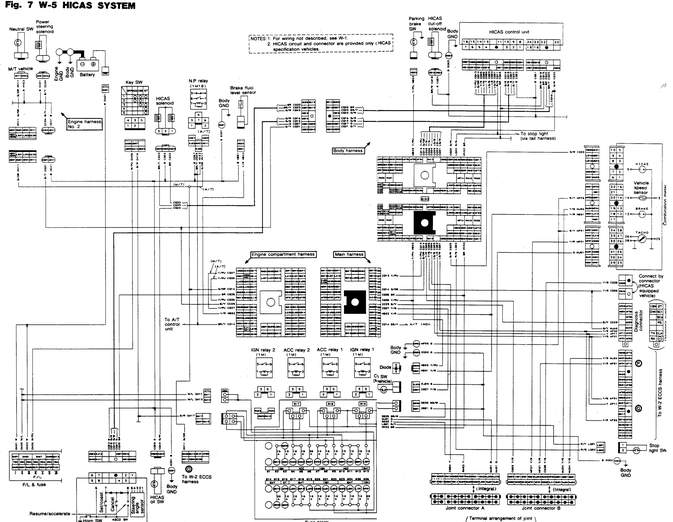

Fig. No. 8 W-6 AIR CONDITIONER HARNESS

Electrically controlled active full-automatic air conditioner

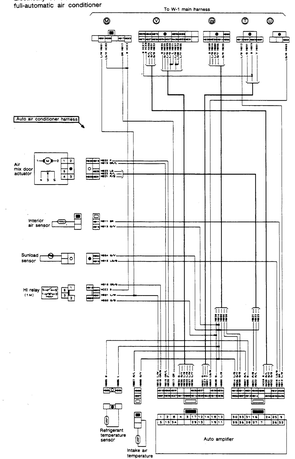

Fig. No. 5 W-3 E-TS SYSTEM